ACS-21401

Fabrication and documents of this product confirms EN 14344

BICYCLE CHILD CARRIER

This document contains safety information on installation and use of the product.

USE & CARE

- Minimum age of the bicycle rider with child seat : 16 years old.
- This child seat allows to carry one child only, who's age is younger than 7 years old and older than 9 months, who can sit upstraight by him/herself and weights no more than 22 kg. Please constantly check your child's age, size and weight at all time, Child's condition exceeding any of these parameters is prohibited to use.
- Before use, please ensure that there is not any sharp edge or objects on or near the child seat. Eg. Fayed edges.
- Please ensure that there is not any possible chance that child's body and clothing may contact any moving part of the bicycle during the use of this child seat as the child grows. Please constantly check the child's feet are well kept in the foot rests to avoid entrapment into wheels.
- Always to use the restraint system. ensuring the child is restrained in the seat. For those children who may not remain calm and seated while siting in this child seat are recommend not to use untill able to. Also ensure that the restrain system is not loose or able to become trapped in any moving parts particularly the wheels, including when the cycle is ridden without a child in seat.
- Please feel child seat's surface tempreture before placing your child in. check if excessive tempreture (eg. due to direct exposure to sun) occured to the seat before placing the child in it.
- When transporting the bicycle by car(outside the car) remove the seat. Air turbulence might damage the seat or loosen its fastenings to the bicycle, which could result in an accident.
- Dress your child more warmly during the use of the child seat, weather and add rain protection your child.
- Helmet for the child is strongly recommended to use during riding.
- Please notify your dealer for replacment if any component is missing or broken.

MAINTENANCE

Maitenance of this child seat is simple and does not require special techniques. However, we recommend constantly check the following procedures.

- Regular check the condition of attaching parts of the child seat.
- Seat cushion is best kept hygienic by washing regularly. Hand wash with mild detergent is recommend than washing mechine. Bleaching and corrosive solvent are prohibited to apply.
- For any broken or damaged part after used, please contact the local dealer or origional purchased outlet.

WARNING

- No luggage should be carried on the rear part of your bicycle once child seat is fitted. Unbalance weight may course the bicycle to keel over and endanger your child. If necessary, carry such loads at the opposite end of bicycle. e,g. use the front carrier.
- Modification of any part of this child seat is prohibited to avoid safety of child and rider.
- Please note that the bicycle's riding behavior may differ from riding without baby seat due to additional weights and balance. Please practice to adapt the peddling, steering and braking.
- Please do not park and leave your bicycle unattended while child is in seat.
- Please stop using if any part malfunction for safety.
- Please ensure all parts secured, well functioning and in place before each ride.
- please ensure the safety strap **D** is always secured and tightened.
- For safety, this child seat should only to be fitted to luggage carrier conforming ISO11243 with Max load of 25 Kg.
- This child seat accommodate fitting to luggage carrier width between 120 to 175 mm.

ANY ENQUIRY REGARDING FITTING AND USING OF THIS PRODUCT IS RECOMMENDED TO CONTACT YOUR PROFESSIONAL BICYCLE DEALER. PLEASE KEEP THIS INSTRUCTION DOCUMENT FOR FUTURE USE.

NOTIC BEFORE ASSEMBLY

MAXIMUM LOAD (KG)

22 (KG)

BICYCLE WHEEL SIZE only

26"~28"

TREKKING & CITY BIKES

BALANCE CHECK

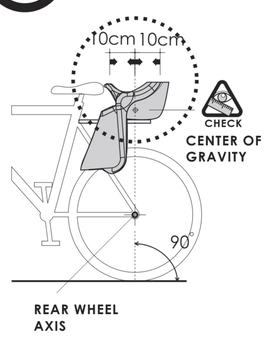

BOTH SIDES OF SEAT BODY HAS EACH **CENTER OF GRAVITY** MARK. WHEN SEAT IS PLACED ON CARRIAGE AND YET THE **CENTER OF GRAVITY** MARK CAN NOT FALL HORIZONTALLY WITHIN 10 CM FROM REAR WHEEL AXIS, YOUR BICYCLE IS NOT SUITABLE TO INSTALL THIS CHILD SEAT.

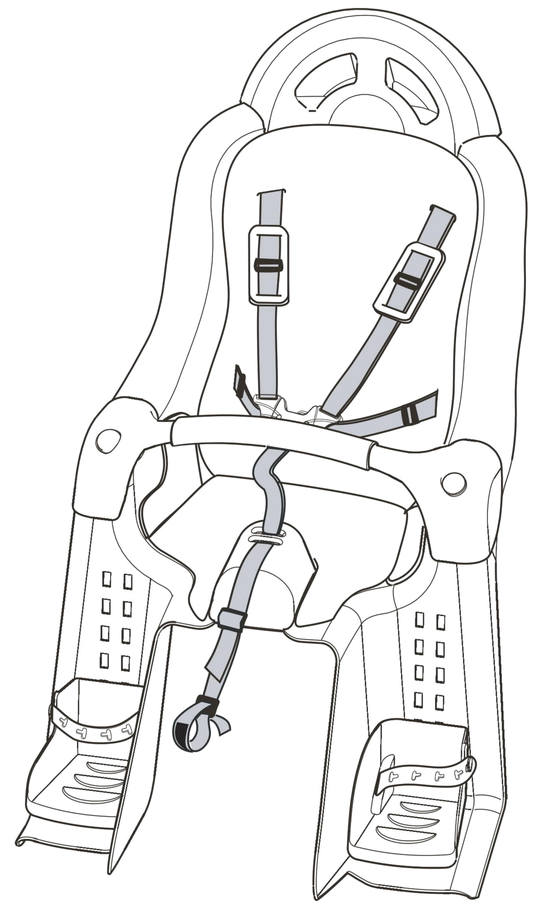

CARRIER WIDTH 120~175mm

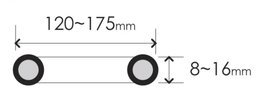

TUBE SIZE 8~16mm

TOOLS REQUIRED

10mm SPANNER

PART LIST A-S

Please return this product to the origional purchase outlet if any part is missing.

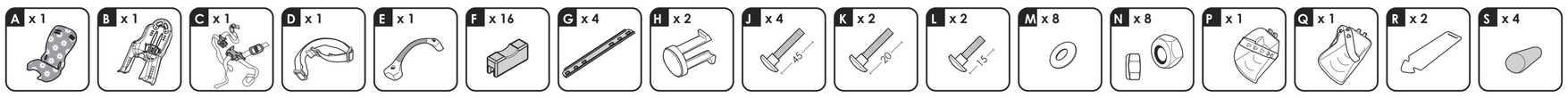

ASSEMBLY INSTRUCTION 1 - 7

Please ensure to check whether all part of the bicycle function correctly with the seat mounted.

1

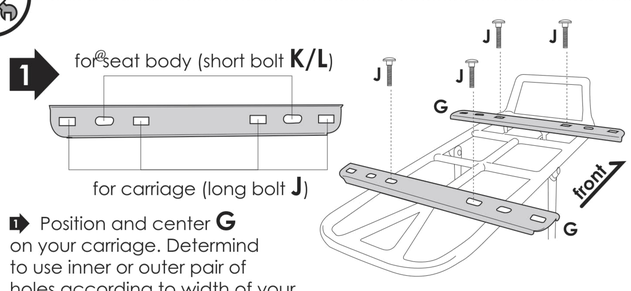

1 Position and center **G** on your carriage. Determind to use inner or outer pair of holes according to width of your bicycle carriage. Place the long bolt **J** into the ideal pair of holes.

2

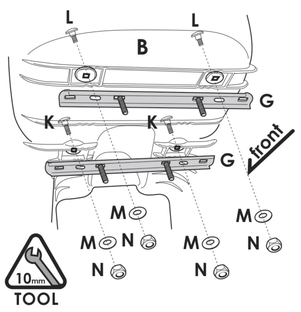

2 Insert 20mm bolt **K** to the front and 15mm bolts **L** to the back from basin of seat body **B**, bring **G** (with long bolt **J** on) and secure under **B** with washers **M** and nuts **N.**

3

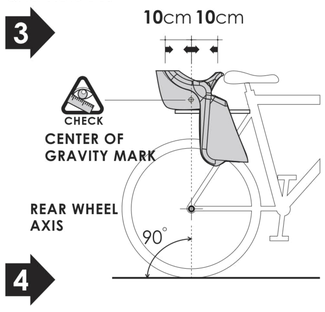

3 place **B** on your bicycle carriage, move back and forth so **CENTER OF GRAVITY** sign(doted on the side of seat body) falls in 10cm horizontally centered from rear wheel axis.

4

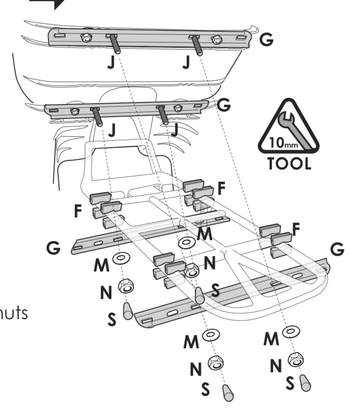

4 Once positioned, Push **F** onto **G**'s side flange and position between **G** and your bicycle carriage. fixe the child seat with 2 more **G** under the carriage with washer **M** and nuts **N.**Ensure all nuts securly tightened. Inser the bolt caps **S** on ends of all 4 long bolts **J**.

5

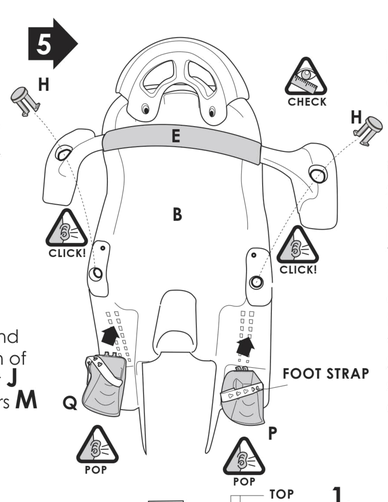

5 Place holding pad **E** to its position, push **H** into the holes and hear the "click" sound to confirm secured.

Before setting up the height for foot rest **P** and **Q**, you may seat your child on the child seat to find out the best height to position the foot rests.
To securely fix the foot rests, push the upper catch into the rectangular holes first, then push the lower catch hard untill you hear a "pop" sound.
Secure and tighten the foot strap once your child is seated and feet inside the foot rests.

6

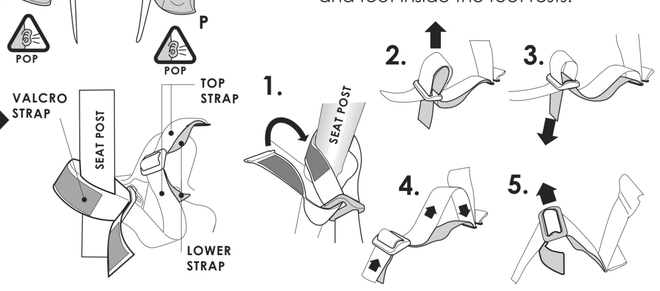

6 Before riding with your child in the ready assembled child seat, please ensure the safety strap **D** is securely tightened between the seat body and seat post.
1. Wrap valcro strape around the seat post and through the bcukle, join the valcro. Do not yet join the valcro to the full length, save about half of the length for tightening the full strap to finish later.
2.& 3. Pull out both top strap and lower strap from the center buckle. Bigger the loop shortens more strap . Pull the out the lower strap to close the loop.
4. feed the top strap into the hole on seat body by pulling in direction as show in diagram.
5. Pull both strap outwards with the center buckle till stop. Continue procedure **2.~5**. till the full strap is almost firm, undo the valcro strap and pull tight to finally tighten the full strap.

7

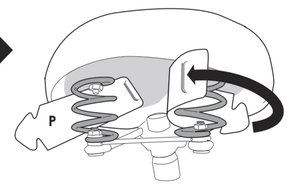

7 wrap **R** around the spring under saddle, insert the arrow into the cut out on its tail to form a tube. This is used to prevent your child from enjury by putting his/her finger into the spring.

CARE & SAFETY

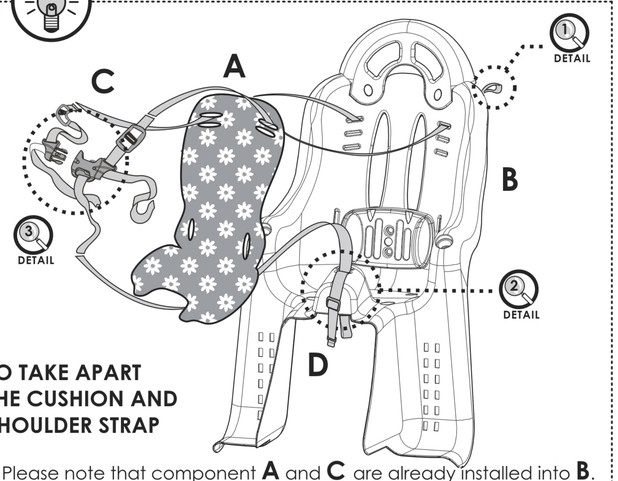

TO TAKE APART THE CUSHION AND SHOULDER STRAP

Please note that component **A** and **C** are already installed into **B**. See **Detail 1** for replacing or cleaning of **A**. **C** is the shoulder strap and safety clip to keep your child secured in seat body **B. D** is a seperated component for securing child seat in case of detachment while riding. Please see **Detail 2**. for installation.

1

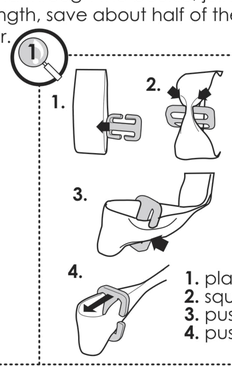

1. place plastic clip in the loop of the strap.
2. squeeze the strap so the ends fit into the gap of the clip.
3. push the strap into the gap, and do the other side.
4. push the clip to the end of the strap loop to finish.

2

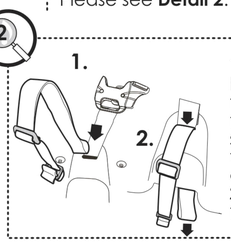

1. take the plastic buckle out and push the strap end through the cutout on the child seat's hump top, pull the strap from bottom of the baby seat.
2. perform **Detail 1** to the loop pulled.

3

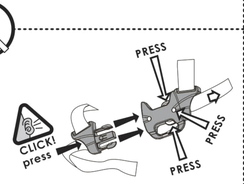

to **open**, press buttons as shown and pull out. to **close**, push the side clips into center piece. A **CLICK** sound to ensure secured fit.